URCIUOLI MINOR PARTITION
STORMWATER MANAGEMENT PLAN
APRIL 2007

CONSTRUCTION NOTES

(415) CONST 8" ADS PLASTIC CATCH BASIN
(439) CONST GRASSY SWALE PER DETAIL THIS SHEET
(441) CONST ROAD SIDE DITCH PER DETAIL THIS SHEET
(476) CONST 2" STORM DRAIN PIPE
(477) CONST 4" STORM DRAIN PIPE
(479) CONST 8" STORM DRAIN PIPE

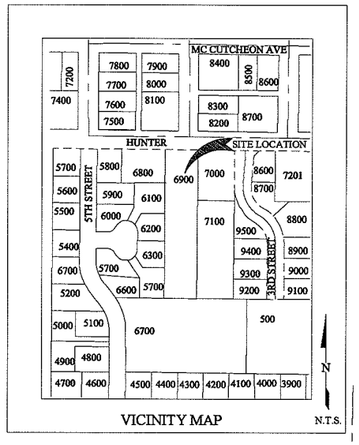

VICINITY MAP

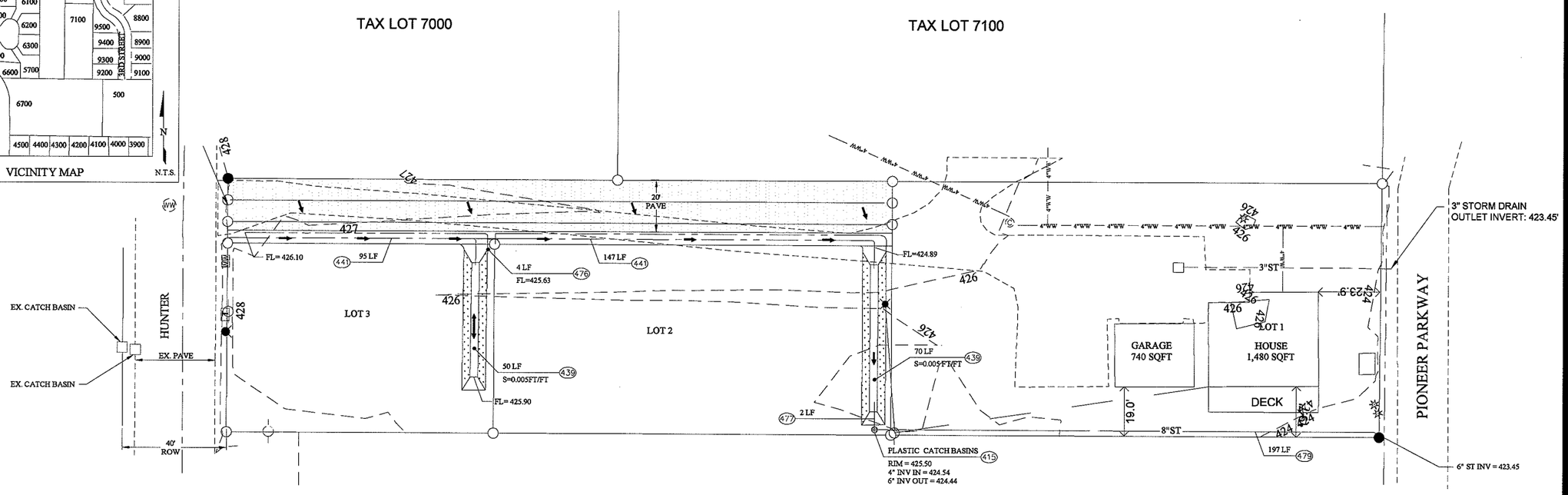

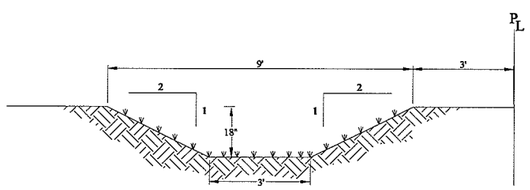

GRASSY SWALE & DETENTION AREA
N.T.S.

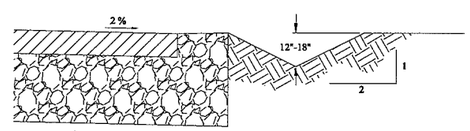

ROAD SIDE DITCH
N.T.S.

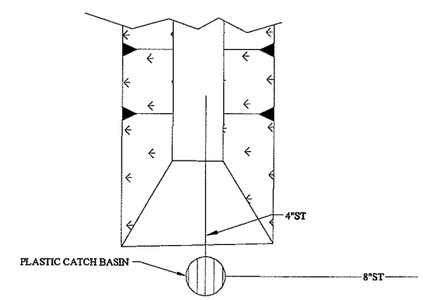

LOT TWO DETENTION OUTLET
N.T.S.

LEGEND

- FLOW DIRECTION
- EXISTING STORMWATER PIPE
- 4"WW — 4"WW — EXISTING WASTEWATER PIPE
- EXISTING CATCH BASIN
- EXISTING WW MANHOLE
- EXISTING CLEAN OUT
- EXISTING WATER METER
- EXISTING POWER POLE
- 8" ST — PROPOSED STORMWATER PIPE
- PROPOSED PAVING
- PROPOSED STORMWATER DETENTION BASIN & TREATMENT SWALE

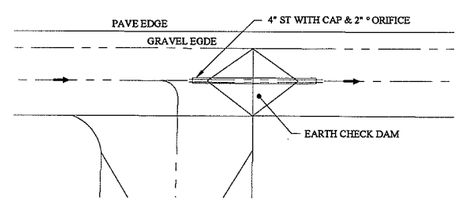

LOT THREE DETENTION OUTLET
N.T.S.

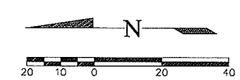

ECR & Associates, Inc.
Engineers, Geologists, and Surveyors
2335B Prairie Road
Eugene, Oregon 97402
(541) 688-8322
Fax (541) 688-8387

REGISTERED PROFESSIONAL ENGINEER — OREGON — DANIEL HILL OLMSTEAD — RENEWS: 12/31/08

URCIUOLI MINOR PARTITION
STORMWATER MANAGEMENT PLAN
VENETA, OREGON

No	Description of Revisions	Date	Name

Date	4-25-2007
Job Number	5898-07-0035
Design by	D. OLMSTEAD
Drawn by	K. JAYCOBS
Checked by	D. OLMSTEAD

Sheet Number
1 OF 1

FILE INFO
Plot Date Apr 25, 2007 - 10:22am
Pathname J:\5898\07-0035\Urciuoli\5898\07-0035 Urciuoli, James\07-0035-B.dwg\07-035-TB (8.5)\Projects\5898\07-0035 Urciuoli, James\07-035-TB.dwg\
Xrefs: J:\5898\07-0035 Urciuoli, James\07-0035-STTE PLAN\xrg-dwg LAYOUT=D (22Z) PLAN
Main File: S:\Projects\5898\07-0035 Urciuoli, James\07-0035-STTE PLAN.dwg